Available online at www.sciencedirect.com

ScienceDirect

Procedia CIRP 88 (2020) 509–514

www.elsevier.com/locate/procedia

13th CIRP Conference on Intelligent Computation in Manufacturing Engineering, CIRP ICME '19

Design optimization of gate system on high pressure die casting of AlSi13Fe alloy by means of finite element simulations

Mohamad El Mehtedi[a,*], Tommaso Mancia[a], Pasquale Buonadonna[b], Leonardo Guzzini[c], Enrico Santini[c], Archimede Forcellese[a]

[a]*DIISM Department, Università Politecnica delle Marche, Via Brecce Bianche, 60131 Ancona, Italy*
[b]*DIMCM Department, University of Cagliari, Via Marengo 2, Cagliari, 09123, Italy*
[c]*iGuzzini illuminazione S.p.A., Via Mariano Guzzini, 62019 Recanati, Italy*

* Corresponding author. Tel.: +39 071 2204731; fax: +39 071 2204801. *E-mail address:* m.elmehtedi@univpm.it

Abstract

The diecasting modern industries are moving towards the proof-of-concept methods based on finite element simulation (FEM), abandoning the traditional trial-and-error. Aluminum DC is a very complex process because the mold filling problems. In the new design production system approach, the FEM simulations play an important role, virtually recreating the entire casting phases. In this research, simulations were carried out using a commercial software to optimize the gates and runner's design of a thin panel component in G-AlSi13Fe aluminum alloy actually realized in AA3004 sheet metal formed. Filling analysis was used to define the gate's size, its correct positioning and the runner system design.

Keywords: High pressure die casting; Aluminium casting; FEM simulation; Runners system; Design optimization

1. Introduction

The HPDC method (High Pressure Die Casting) is one of the most important techniques for the production of manufactured articles for the automotive sector and for electronic parts. It is also a particularly economical fusion technique that can produce several complex shapes at the same time. The artifacts produced by this technique are the result of various factors and process variables, such as the design of the mold with the design of the gates and runners, and the relationship between the injection system, casting condition and cooling system. In particular, one of the most critical aspects is the speed of the molten metal during the filling of the form which can undergo large variations, especially when the jet has very thin walls. If all these conditions are not adequately considered, there is the risk of incurring various jet defects such as porosity due to trapped gases, flow lines, non-homogeneous volumetric shrinkage and poor surface finish. In the current industries the design and development of a fusion layout takes place through a trial and error method based on heuristic know-how and the solution obtained obviously lacks scientific calculations and analysis [1, 2]. It is for this reason that, during the design of the mold, the optimization of the gates and runners system is very important.

A concrete help to the design comes from the finite element simulation methodology that allows the designers to verify, enhance and optimize the solutions before the actual realization of the casting. With reference to the quality of the product and the perspective of forecasting defects, the finite element simulation is a much more efficient and economic techniques for the analysis and evaluation of the quality and defects of the products [3]. Many researchers have carried out simulation tests for the die-casting of aluminum, zinc and tin alloys in various productive sectors, mainly in the automotive's one [4, 5], simplified models for simulations have also been studied, with related case studies [6, 7], however a more accurate analysis of small thickness castings was analyzed only for magnesium [8], and not yet on aluminum alloys.

10.1016/j.procir.2020.05.088

In this work, the analysis work carried out for the production of a small thickness component (cover of a led streetlamp) is presented by means of die-cast aluminum alloy. Generally, this type of products is made through the sheet metal stamping process, however with the particular aluminum alloy chosen and based on the customer's request, it was necessary to opt for the die casting process. For this reason, finite element simulation tests (FEM) have been carried out in order to be able to predict any cast defects that may occur due to non-uniform metal flow and vortex presence during the filling of the liquid in the mold cavity. Thanks to the results of the simulations, it was possible to evaluate the design of the gate and runners' system and to modify it step by step until obtaining satisfactory simulation results.

2. General high pressure die casting process

High pressure die casting is a process in which the molten metal fills into the mold with a plunger that guarantees a high pressure. The inverse of the part's shape basically consists of the cavity and core of the mold. For a better understanding, the main phases of a generic die-casting process are highlighted below:

- Step 1: in the initial situation the mold is open and is ready to start a new cycle.
- Step 2: the clamping system is moved to close the mold which is preheated to a predetermined temperature.
- Step 3: the molten material is injected up to the section of the casting ingates, with a speed range between 3 m/s and 6 m/s.
- Step 4: the melted material propagates in the mold cavity by means of a high pressure produced by the plunger (piston), with an average speed of about 40 m/s in the gate's sections.
- Step 5: the mold is kept tight, with the material speed zero, because the cavity is completely filled, but the piston continues its advance in order to avoid the defective shrinkage phenomenon.
- Step 6: the mold is then opened, and the part produced is ejected from the expulsion pins.
- Step 7: while the mold is open, the blow cleans and cools the mold surface.

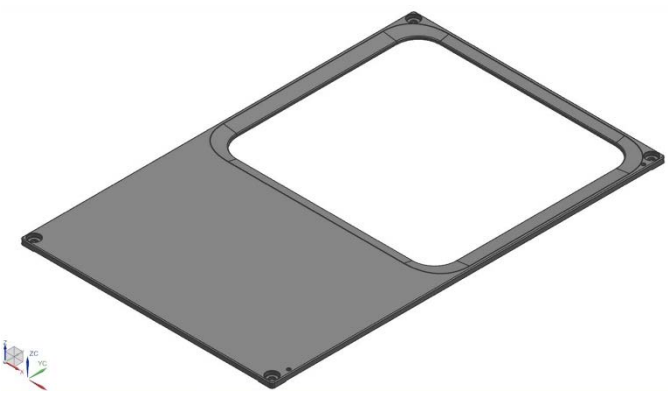

Fig. 1. 3D rapresentation of the analysed piece.

3. FEM simulation of high pressure die casting process

3.1. Casting properties

The component chosen for the analysis is shown in Figure 1 and represents the cover of a led streetlamp for street lighting with a very simple geometry, in which a dimension, the thickness, turns out to be much lower than the other two. This part is characterized by a volume of 173,8 cm^3 and a total surface of 134,0 cm^2, with a particularly low surface/volume ratio.

In fact, the average thickness is about 2.5 mm calculated by the equation (1):

$$T_{\mathrm{cm}} = \left(\frac{V_{\mathrm{c}}}{S_{\mathrm{c}}}\right) \times H_m \qquad (1)$$

Where:

- T_{cm} is the average thickness of the casting;
- V_c is the total volume of the casting;
- S_c is the total surface of the casting;
- H_m is the weighted average of average heights distributed over the entire surface.

In this case, due to the particular geometry of the part, where the lateral surface is negligible with respect to the two base surfaces, the H_m value was considered equal to 2.

It was chosen by the customer, during the processing design phase, to realize the product by high pressure die casting and the particular geometry was the reason why it was chosen to proceed through finite elements preliminary simulations.

3.2. CAD Geometry design of the casting system

During the design phase, it was decided to position the casting connections along the thickness. In this case the runners and gates system were designed through a commercial CAD software, which made it possible to convert and export the three-dimensional geometry of the casting system in the STL format, which can be imported into the software chosen for FEM analysis. The software used to perform FEM simulations is the commercial software Magmasoft, particularly suitable for die-casting processes.

To optimize the process in terms of materials and costs, the system will be placed inside the "window" of the frame.

The pouring connections are directed towards the section with a greater thermal module, as can be seen in Figure 2, to feed the lower thermal module sections to guarantee the filling of the cavity in its entirety.

The sizing of the casting connections, a crucial step for positive simulation results, depends on the size of the average thickness, previously reported and calculated using the equation (1), and the volumetric flow rate of the molten materials, which depends on the total volume of the casting (to calculate the total volume of the casting, the volumes of the sprue wells in Figure 2 must also be added).

This premise has a fundamental impact for the discussion that follows, because the evolution of the casting system

geometries, starting from the one of Figure 2, which represents the first attempt, will concern precisely the two above mentioned parameters (runners and volume of the sprue wells).

3.2. Pre-Processing and Mesh Generation

Once the CAD modeling of the casting is finished, it is necessary to use some tricks before importing the file into Magmasoft, in order to ensure the optimal reading of the content.

First of all, the casting system must be designed where the mold separation plan will be, so as to allow its removal once the casting cycle is finished. Subsequently, and always within the CAD, it is necessary to create the model of both half-molds.

Finally, it is fundamental to orient the Cartesian axes, before importing the file, exactly as the mold would be placed on the die-casting injection press, so that, if the Z axis represents the vertical orientation, the X axis should be oriented perpendicularly to the section of the casting channel, therefore with inward direction to the casting basin.

Once all the CAD models have been imported into the FEM simulation software, it is possible to set up all the process variables, such as the injection temperature, the flow speed and the casting material.

For the particular geometry of the part, it is necessary to use a material with high castability and low melting temperature. The material chosen to realize the casting is the aluminum alloy UNI 5079 GD AlSi13Fe with the chemical composition shown in Table 1, with the following mechanical characteristics:

- Ultimate Tensile Strength (UTS) equal to 240MPa;
- Relative elongation of 1.5-2.5%;
- Brinell microhardness of 75-95;

Table 1. Chemical composition (%) of the aluminum alloy

Alloy	Elements									
	Si	Fe	Cu	Mn	Mg	Ni	Zn	Pb	Sn	Ti
UNI 5079 GD AlSi13Fe	13,0	1,0	0,80	0,30	0,30	0,20	0,50	0,15	0,10	0,15

Before starting the simulation, it is necessary to configure the pouring point, that is the point of attachment of the piston on the mold with reference to the origin of the axes (x, y, z), which had already been set previously in the CAD, and insert the air vents at the ends of the sprue wells.

The next step concerns the modeling of the mesh for the simulation, that is the subdivision of the different 3D models into smaller finite elements.

This phase is of crucial importance because it is a matter of configuring the level of accuracy of the simulation, therefore of how the fluid advances, fills the cavity and how the temperature is distributed throughout the system, but above all it allows to understand if there will be areas of impurities or porosities.

For each type of solid it is possible to establish the level of accuracy for the subdivision of the model into finite elements. To assess the size of the individual elements of the mesh, it was

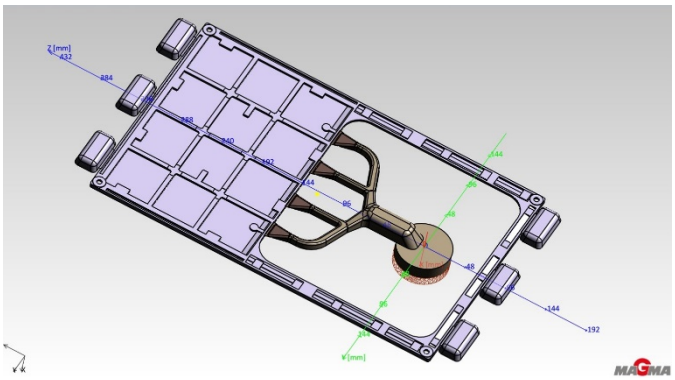

Fig. 2 First simulation entire model.

decided to estimate a minimum of three elements on the thickness section of each part to ensure a good level of simulation filling quality. It is also important to pay attention to the area of the casting ingates and to the most at-risk points, for example areas of reduced thickness, ribs, sharp edges or others and various possible obstacles, for which it is necessary to increase the density of the mesh, to be able to best assess any critical issues in the areas most at risk.

From the two previous hypotheses (minimum of three elements on the section and a greater density of elements in the critical areas), for the first analysis, the model was meshed into about 11 million of elements with the dimensions indicated in Table 2.

Table 2. Dimensions of mesh elements

	X	Y	Z
Elements dimension [mm]	0,4	1,0	0,6

As shown in Figure 2, the whole model is meshed into finite elements together with runners, gate and sprue wells, because they represent the entire volume which will be filled with the melted aluminum.

The last procedure, which was performed before starting the simulation, involves also entering process parameters in the simulation software, such as speed, time and flow rate.

As reported in the Table 3, following parameters have been chosen for the first simulation (called Sim-A):

Table 3. Process parameters of the Sim-A

Material		Plunger / Flow	
Liquidus line	577 °C	Diameter	60 mm
Solidus line	571 °C	I phase velocity	0,22 m/s
Initial temperature	640 °C	II phase velocity	2,2 m/s
Volume of casting	243,3 cm^3	I phase flow rate	622,0 cm^3/s
		II phase flow rate	6082,5 cm^3/s
Mold range temperature		200-300°C	
Filling time		0,1689 s	

3.3. Simulations and post-process

Casting simulation of the model had been conducted based on the given condition on Table 3 with Magmasoft. For the simulations it was decided to study the filling process by analyzing the position and the speed of the advancement of the melted front, which describes the state of the movement of the molten flow and the sequence of arrival in the filling process [9]. In this way, in fact, it is possible to highlight any defects that could arise during the process, including the speed of the flow of the melted which should be constant and uniform throughout the volume. Conversely, instead, a sharp increase in the speed of the melted along the thinner ribs of the frame can not only probably lead to discarding the casting, but would also imply the erosion of the mold, thus reducing its useful life.

Other problems that can be foreseen thanks to the FEM simulations are those related to the shrinkage stresses, to the deformation of the casting and to the pores and the trapped gases.

From the Sim-A, it was decided to make some changes to the three-dimensional model, developing in this way a series of successive configurations of the piece design that led the research to perform as many FEM simulations. For each FEM simulation, changes have been made to both the 3D model and the process parameters, starting from those listed in Table 3. The changes to the 3D model have also led to the modification of the meshing values.

In fact, for the second configuration, shown in Figure 3, the number of mesh elements has increased from 11 milions to 13 million as, at the level of 3D design, both the runners and gates system and the number of sprue wells were implemented. With this new configuration, it has been tried to solve the problem of the high speed of the melted, going to insert two additional wells sprue and two branches to the runners system connected to the thinner side walls, as highlighted in Figure 3.

After this second simulation, it has been designed another configuration with new implementation of runners, gates and sprue wells systems.

For this configuration, the number of finite elements in which the model was meshed is almost 16 million, which is motivated by the new runners' design and the addition of two lateral sprue wells, as it can be seen in Figure 4.

Finally, the last configuration shown in Figure 5, the changes made are highlighted by implementing the previous configuration. In this case, it was decided to increase the volumetric flow rate of melt.

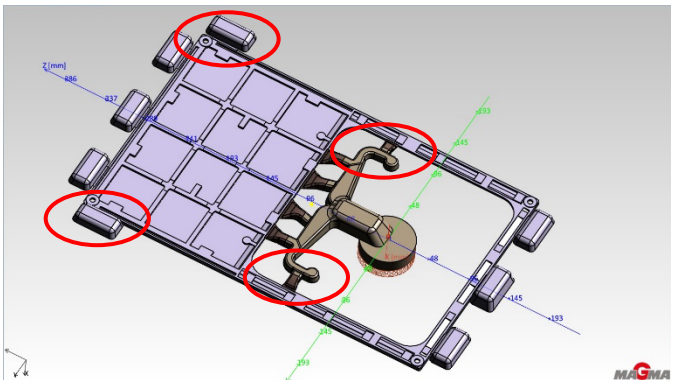

Fig. 3. Second configuration of 3D model.

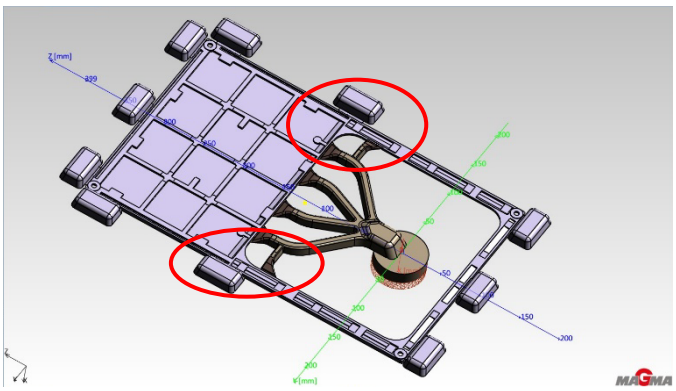

Fig. 4. Third configuration of the 3D model for the Sim-C.

To do this, the number of sprue wells that must be filled in the upper part has been increased (one well per side) and, at the same time, substantial changes have been made to the geometry of the casting connections with accurate drafts and fittings in order to facilitate filling the lower ribs by optimally directing the flow. For this last configuration, it was decided to modify the dimensions of the elements into 0,7 x 0,8 x 0,7 mm, the mesh elements were increased to 17,5 million.

The last simulation (Sim-D) has been performed and, in order to compare them with those of the Sim-A, it is reported, in Table 4, the values of the process parameters set in the Magmasoft software before starting the FEM calculation.

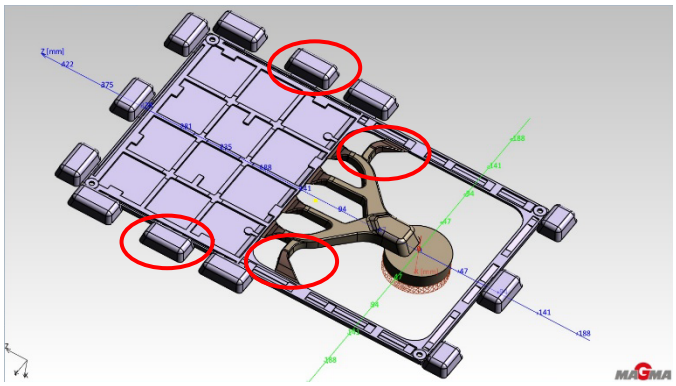

Fig. 5. Final configuration ready for the Sim-D.

Table 4. Process parameters of the Sim-D

Material		**Plunger / Flow**	
Liquidus line	577 °C	Diameter	60 mm
Solidus line	571 °C	I phase velocity	0,2 m/s
Initial temperature	640 °C	II phase velocity	2,3 m/s
Volume of casting	350,0 cm^3	I phase flow rate	769,7 cm^3/s
		II phase flow rate	8750,0 cm^3/s
Mold range temperature		200-300°C	
Filling time		0,1479 s	

4. Results and discussion

To adequately show the results, 5 frames per simulation have been chosen that allow to analyze the position of the molten material for the given percentage of the filling of the entire volume, respectively at 30%, 45%, 65%, 80% and 90%. In fact, in figure 6, where the graduated scale indicates the absolute filling speed, the results of the first three simulations are summarized (Sim-A, Sim-B and Sim-C), presented so that they can be compared on the basis of relative percentage of the fill.

The first observation to make on the results of Figure 6 is that all three simulations present a rather important defect, mainly represented by the high and non-homogeneous speed of the flow of molten material inside the cavity. Thanks to the FEM simulations it was also possible to analyse other probable defects present during the high pressure die-casting process, which were subsequently described for the three simulations.

Starting from the first simulation (Sim-A), defects related to porosity and trapped gases, not present in the Sim-B, were also identified. This last simulation, however, presents a second problem not previously highlighted, namely the deformation of the casting, due to non-uniform shrinkage stresses. In the Sim-C, contrary to the Sim-B, the casting deformation is not present, but the defect of the porosity and trapped gases returns, even if in a small part.

While the results of the last optimized simulation (Sim-D) are shown in Figure 7. The most dangerous defect, the speed of the flow of the molten material, highlighted by the analysis of all the previous simulations, was addressed in the last simulation noting that it originated from the volumetric flow rate of the melted. More precisely, when the upper section is completely filled, the flow rate, supplied by the pouring connections, flows completely into the lower zone, which, due to the principle of conservation of the mass and the much smaller crossing section, leads to a net increase in speed, in proportion to the areas ratio just mentioned.

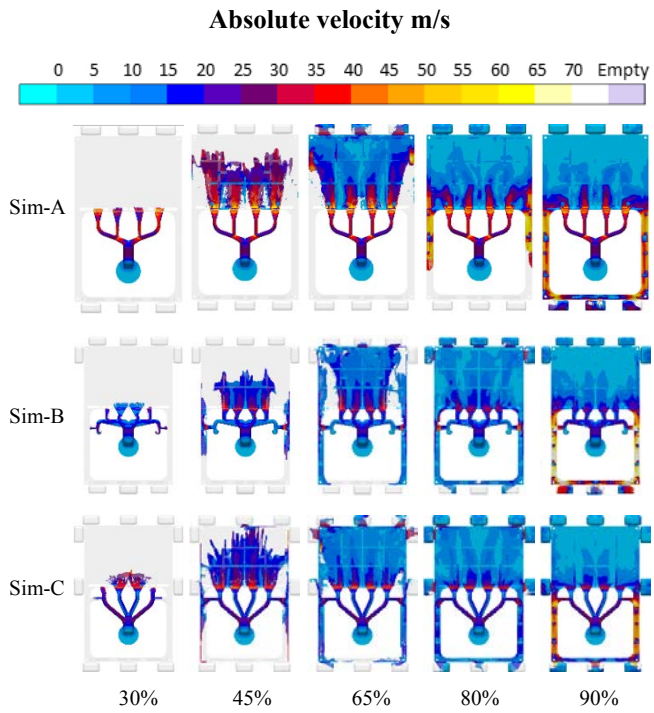

Fig 6. Filling percentage of Sim-A, Sim-B and Sim-C.

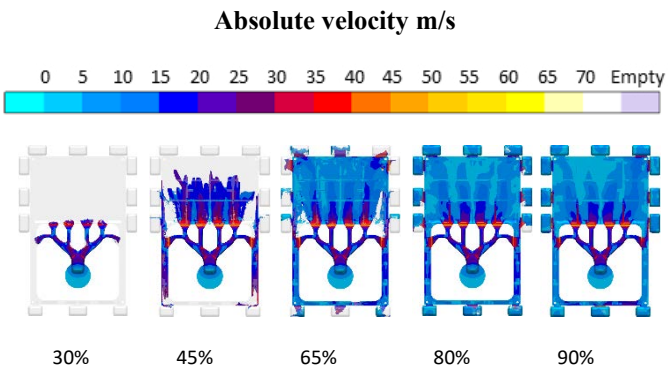

Fig. 7. Sim-D percentage fillings.

The fourth configuration has been studied and remodeled with this type of approach, as explained in the previous paragraph.

Indeed, it can be seen from Figure 7, that the defect analyzed is no longer present because, during all the filling phases, the speed of the melted material remains constant and homogeneous on the entire volume, guaranteeing however an efflux speed from the gates around 40 m/s, as previously explained in paragraph 2, avoiding in this way the casting reject and the mold erosion.

Figure 8 represents the filling phase of the form at 45% and 65% and clearly shows what was said previously. In fact, it appears evident that, for the first three simulations, the melted tends to fill the upper part of the casting first and only then to finish filling the part with the smaller sections. It can also be noted that, starting from the Sim-A to the Sim-C, there is an improvement of this phenomenon, which was optimized in the Sim-D. Thus, with this configuration, the molten material is able to fill the part with the reduced section before the upper part of the casting, which is also confirmed by the reduction of

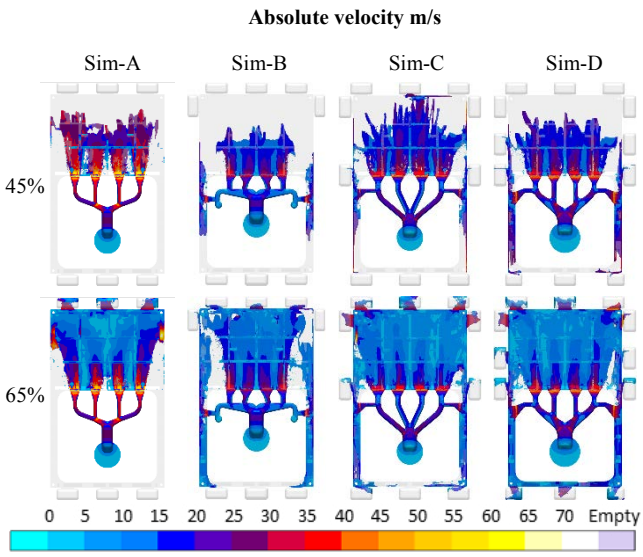

Fig. 8: comparison between simulations at 45% and 65% percentage of filling.

the total filling time which passes from 0,1689 to 0,1479 seconds. Thanks to this, it was observed how the melt is always distributed at uniform speeds and the hollow of the piece is completely filled already at 90%; the remaining 10% filling is for sprue wells, thus ensuring a better efflux of gaseous waste and a more efficient outcome tightening in the fifth stage.

5. Conclusion

In this work, the AlSi13Fe aluminum alloy die casting process was studied and analyzed through FEM simulations, for the realization of a led streetlamp cover for street lighting. A first system of gates and runners was initially developed and used in the first FEM simulation. From the results that emerged from the latter and from the possible defects present in the casting, a consequent and gradual optimization of the feeding system of the molten material was carried out, up to the achievement of satisfactory results listed below:

- During all the filling phases, the melted material is always distributed at uniform speeds, thus reducing the possibility of casting waste and the progressive wear of the mold;
- The mold cavity is completely filled before the sprue wells are filled, guaranteeing a better efflux of the gaseous waste and a more efficient outcome for tightening in the third phase;
- The presence of defects related to casting deformations due to residual shrinkage stresses and gas trapping have been eliminated with consequent porosity.

References

[1] Kyu Seo K, Kyu Kwon H. Simulation Study and Application on HPDC Process with Automobile Part. Advanced Materials Research. 2013;658:281-6.
[2] Young-Chan K, Se-Weon C, Jae-Ik C, Chang-Yeol J, Chang-Seog K. Optimization of the Thin-walled Aluminum Die Casting Die Design by Solidification Simulation. Journal of Korea Foundry Society. 2008;28:5.
[3] Eok-Soo K, Joo-Yul P, Yong-Hyun K, Gi-Man S, Kwang-Hak L. Evaluation of Diecasting Mold Cooling Ability by Decompression Cooling System. Journal of Korea Foundry Society. 2009;29:6.
[4] Venkatesan K, Shivpuri R. Numerical simulation of die cavity filling in die casting and an evaluation of process parameters. 17th International Die Casting Congress and Exposition. Ohio, USA1993. p. 11.
[5] Kwon H-J, Kwon H-K. Computer aided engineering (CAE) simulation for the design optimization of gate system on high pressure die casting (HPDC) process. Robot Cim-Int Manuf. 2019;55:147-53.
[6] Anglada E, Melendez A, Vicario I, Arratibel E, Cangas G. Simplified models for high pressure die casting simulation. Mesic Manufacturing Engineering Society International Conference 2015. 2015;132:974-81.
[7] Anglada E, Melendez A, Vicario I, Arratibel E, Aguillo I. Adjustment of a high pressure die casting simulation model against experimental data. Mesic Manufacturing Engineering Society International Conference 2015. 2015;132:966-73.
[8] Hu BH, Tong KK, Niu XP, Pinwill I. Design and optimisation of runner and gating systems for the die casting of thin-walled magnesium telecommunication parts through numerical simulation. Journal of Materials Processing Technology. 2000;105:128-33.
[9] Noh S, Shin J, Jihae S, Lim H. CAD digital and virtual production PLM: SigmaPress; 2006.